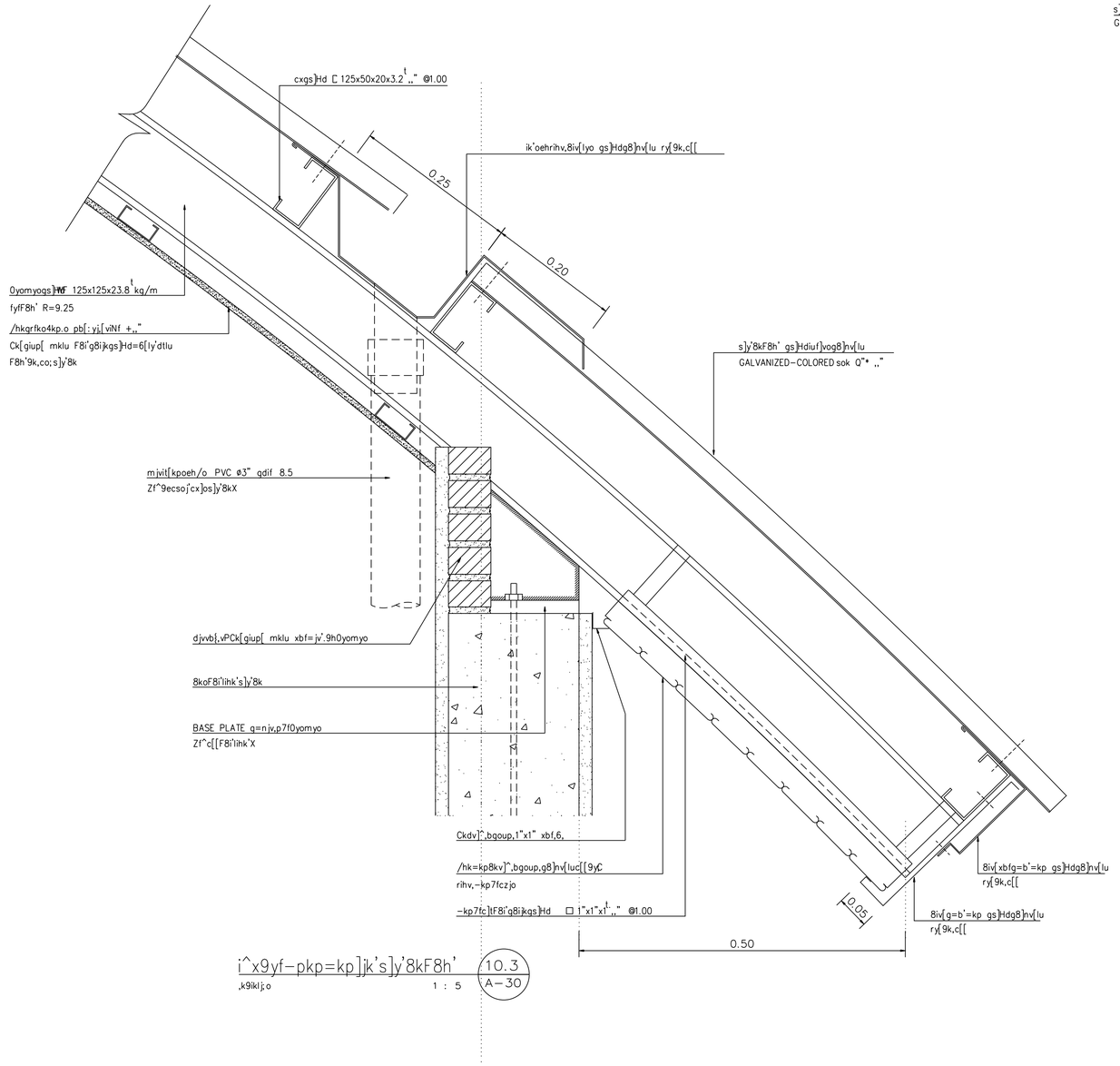

i^x9yf-pkp=kp]jk's]y'8kF8h' 10.3 / A-30

,k9iklj;o 1 : 5

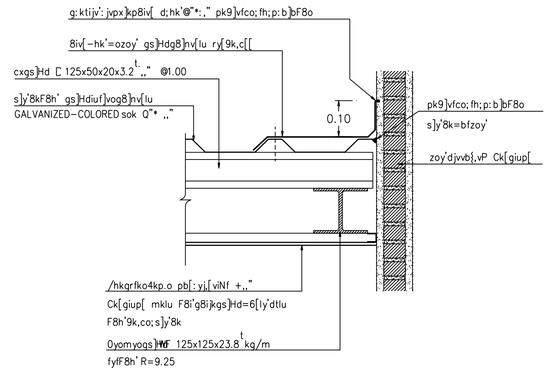

i^x9yf-pkp8iv[-hk'=ozoy' 10.4 / A-30

,k9iklj;o 1 : 10

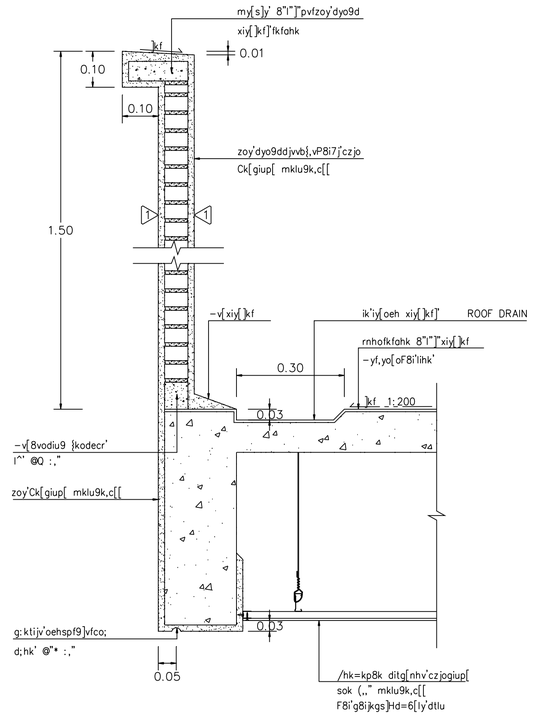

c[[-pkp zoy'dyo9dfkfahk 11 / A-30

,k9iklj;o 1 : 10

REVISIONS		DATE
A	c[[djvlihk'	15/02/2000

NOTE
- ALL DIMENSIONS ARE IN METER UNLESS OTHERWISE INDICATED
- NO DIMENSION SHALL BE SCALED
- ALL DRAWINGS ARE THE PROPERTY OF THE AREA CO.,LTD. AND CAN NOT BE USED REPRODUCED OR DUPLICATED WITHOUT PERMISSION

OWNER

Tok8kigrn jvdkigdK9i

c]tlsdildkigdK9i

DESIGNER

AREA CO.,LTD.

111/1 Ladpraoz3 Ladyao Chatuchak Bangkok 10900
Tel. (662) 5139533-5 Fax. (662) 5139536

l5kxobd

v]diN 9ik=^	l5"@0@$l	
;yo=yp [6P;lb=pN	l5"@*%)4	
ri=yp db9b;ilxitlki	l5"#%+#4	
;b[^]pN g0ibP;ik;6<b	l5"@@0#l	

ASSISTANT ARCHITECT

gdiup'wdi clol6;'LN		

;bL;diF8i'lihk'

,kot 0i^Pr'KNLydfbN	ip"%0#$	
v]diN 9ik=^	ip"$$0$	
foyp l;jk'FC,	ip"%$*_	

;bL;dil6-k4b[k]

l64ymi ;klb=pNd6]	lod"@)%_	
Lbib=yp 0yo9iud6]	x;l"	

;bL;diwaahk

[iil0' g0ibPdb0r^]z]	;od"@(#	
=yp;ycoN :njv9i'	4od"*%@%	

;bL;dig8injv'd]

lyi ob9bro	ld"@%_$	

,ylRokdi

ruil69 l6;iildpt;bdpN	l5"%#*04	
lbmTb=yp v6joptryd5N"Z4kp.oX		

DRAWN [bry9i s,yf,lug]bL	DATE
CHECKED	
APPROVED	

F8i'dki

vk8kileoyd'kolk-k

muj9&'

v" liirpk 0" =ypokm

c[[clf'

i^x9yf-pkps]y'8kF8h'

c[[-pkpzoy'dyo9dfkfahk

FILE NO 9910	DRAWING NO A - 30
DATE 15 / 02 / 2000	
SUB TOTAL	GRAND TOTAL

Area-A2(roll) 390x600mm.