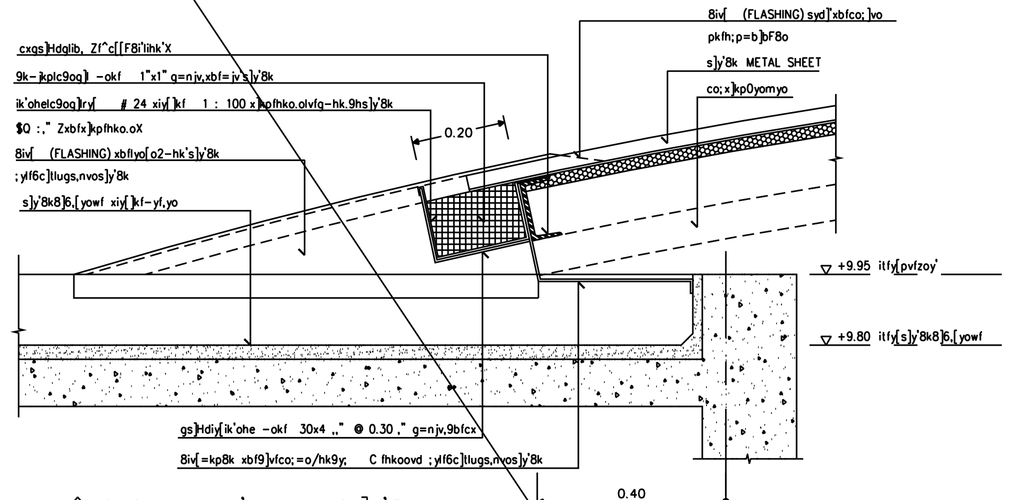

i^x9yf-pkp ik'ohe pvfs]y'8k (11.4 / A-32)
Zvk8ki.sPjX
,k9iklj;o 1 : 10

s,kpgs96 : =jv'8iv[(FLASHING) =oik'ohelc9og]l.shry[-v[pk9]vfco;fh;p=b]bF8o

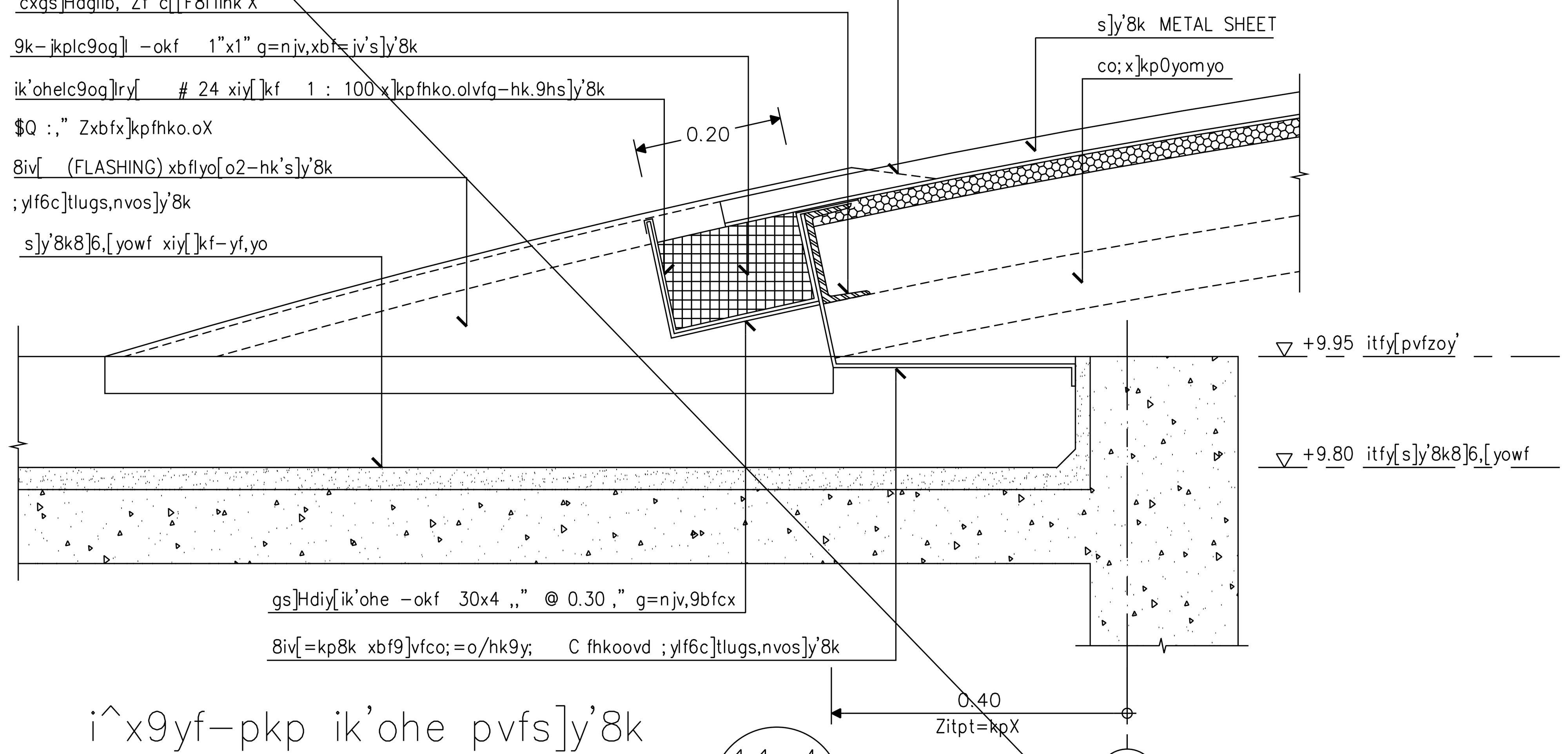

i^x9yf-pkp ik'ohe pvfs]y'8k (11.4 / A-32)
Zvk8ki.sPjX
,k9iklj;o 1 : 10

s,kpgs96 : =jv'8iv[(FLASHING) =oik'ohelc9og]l.shry[-v[pk9]vfco;fh;p=b]bF8o

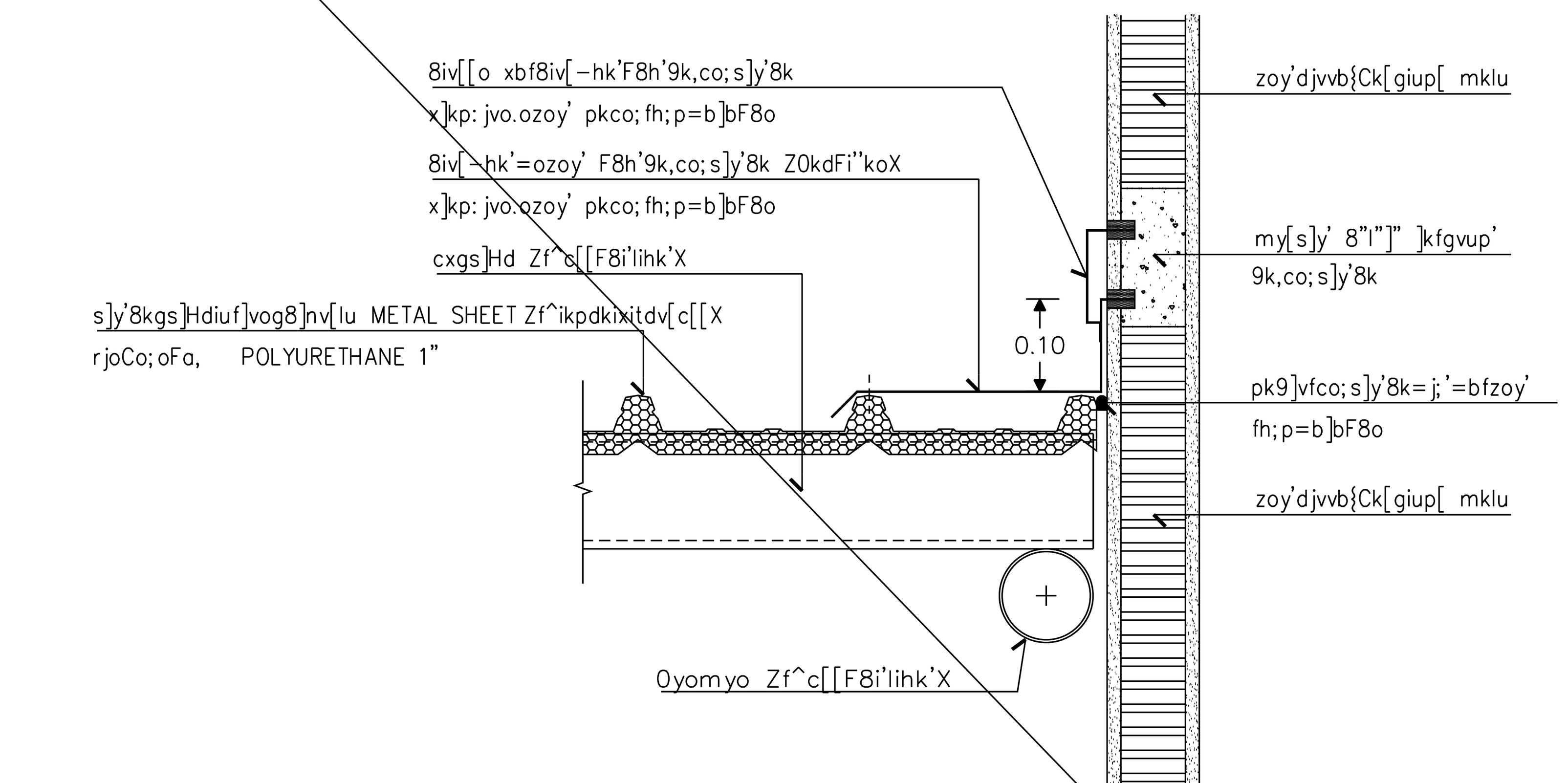

i^x9yf-pkp 8iv[-hk'd]jv'[yowf (11.3 / A-32)
Zvk8ki.sPjX
,k9iklj;o 1 : 10

s,kpgs96 : g:ktijv': jvox]kp8iv[-hk'=ozoy' (FLASHING) d;hk' @"* :," /y'.omy[s]y' 8"l"]"
pk9]vfco;fh;p:b]bF8o myh'8iv[9y;[oc]t]jk'

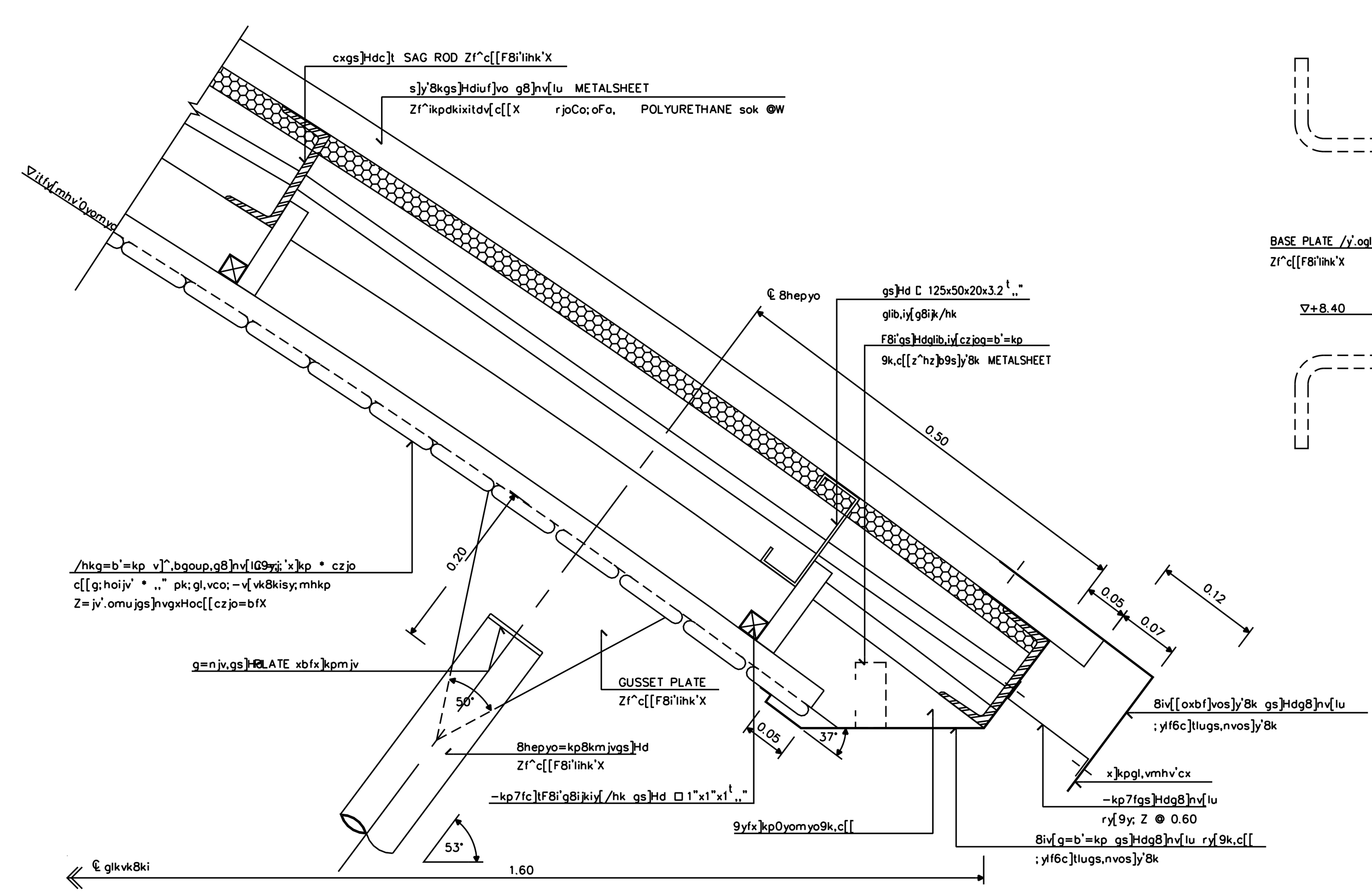

i^x9yf-pkp=kp8k s]y'8kF8h' (11 / A-32)
Zvk8ki.sPjX
,k9iklj;o 1 : 5

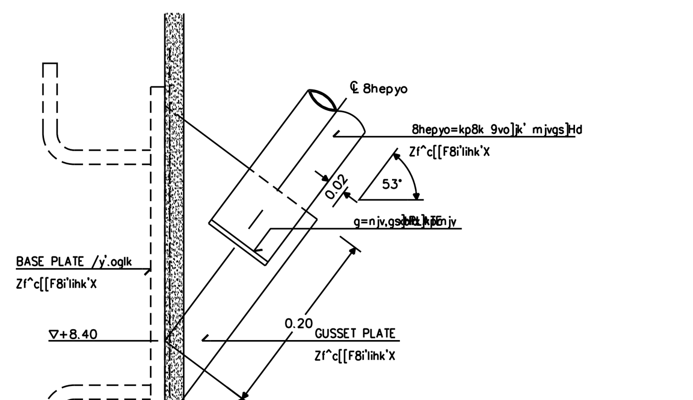

i^x9yf-pkp8hepyo=kp8k9vo]jk' (11.1 / A-32)
,k9iklj;o 1 : 5

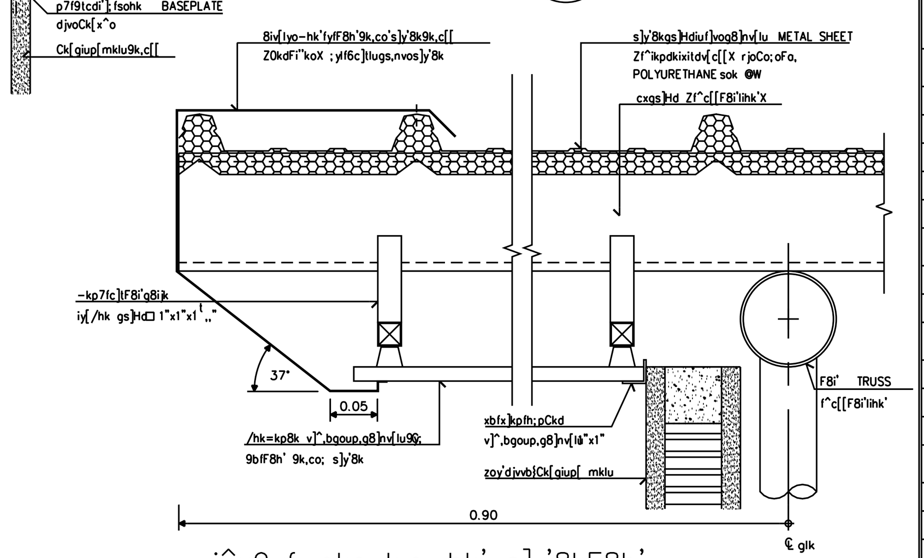

i^x9yf-pkp lyo-hk' s]y'8kF8h' (11.2 / A-32)
Zvk8ki.sPjX
,k9iklj;o 1 : 5

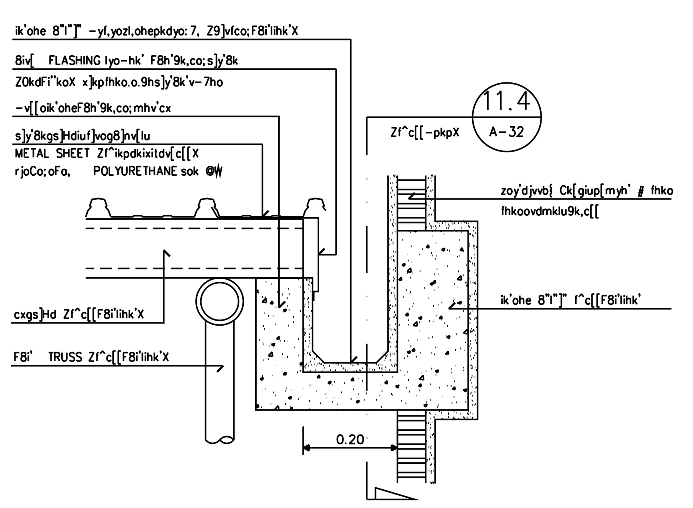

i^x9yf-pkp ik'ohe8"l"]" (11.3 / A-32)
,k9iklj;o 1 : 10

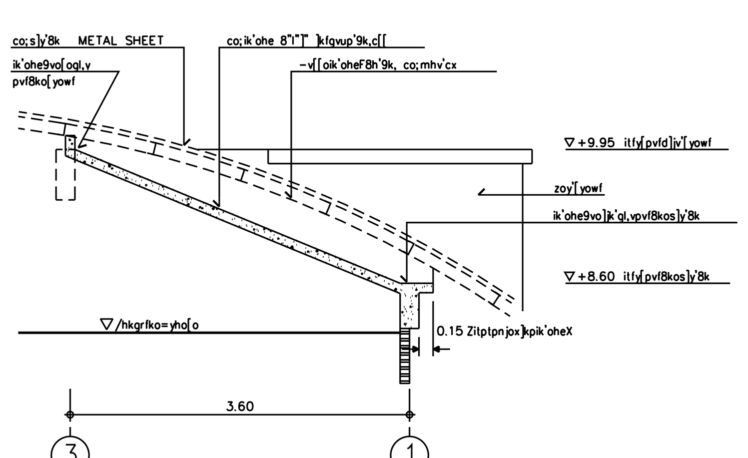

i^x9yf9k,pk;ik'ohe (11.4 / A-32)
,k9iklj;o 1:50

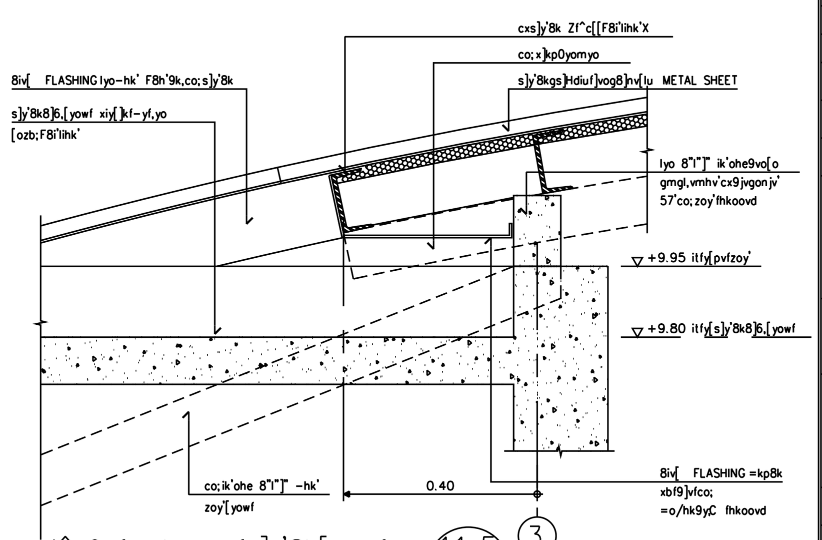

i^x9yf-pkp pvfs]y'8k[yowf (11.5 / A-32)
,k9iklj;o 1 : 10

REVISIONS	DATE

NOTE
- ALL DIMENSIONS ARE IN METER UNLESS OTHERWISE INDICATED
- NO DIMENSION SHALL BE SCALED
- ALL DRAWINGS ARE THE PROPERTY OF THE AREA CO.,LTD. AND CAN NOT BE USED REPRODUCED OR DUPLICATED WITHOUT PERMISSION

OWNER
Tok8kigrnjvdkigdK9i
c]tlsdildkigdK9i

DESIGNER
AREA CO.,LTD.
111/1 Ladprao23 Ladyao Chatuchak Bangkok 10900
Tel. (662) 5139533-5 Fax. (662) 5139536

I5kxobd

DRAWN	DATE
CHECKED	
APPROVED	

F8i'dki
xiy[xi6'vk8kileoyd'kolk-k
Zleoyd'ko # =yhoX

muj9&'

c[[clf'
c[[-pkp=kp8ks]y'8kF8h' @@
Z vk8ki.sPj X

FILE NO 0203	DRAWING NO A - 32
DATE 10 / 02 / 2003	
SUB TOTAL 46	GRAND TOTAL