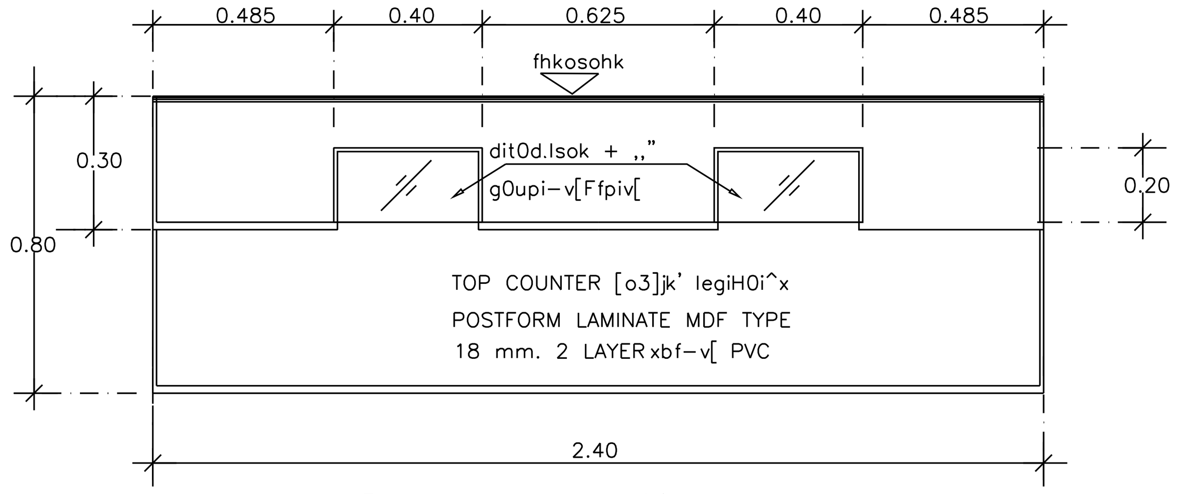

cx]og8koNg9viNl^' F4
,k9iklj;o 1 : 20

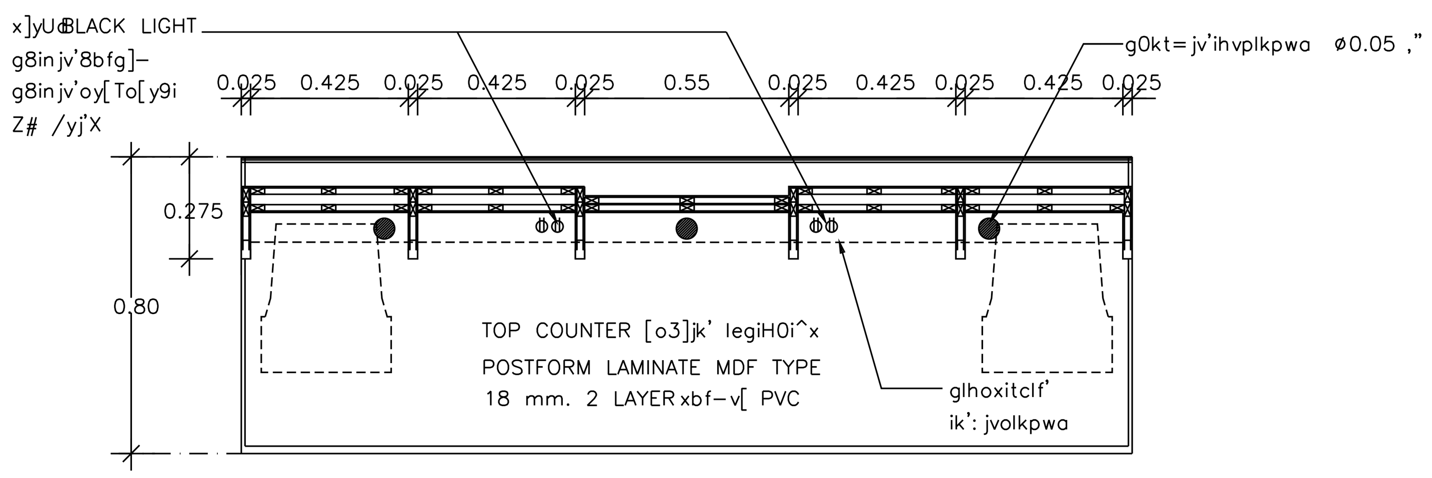

i^x9yfcx]o
,k9iklj;o 1 : 20

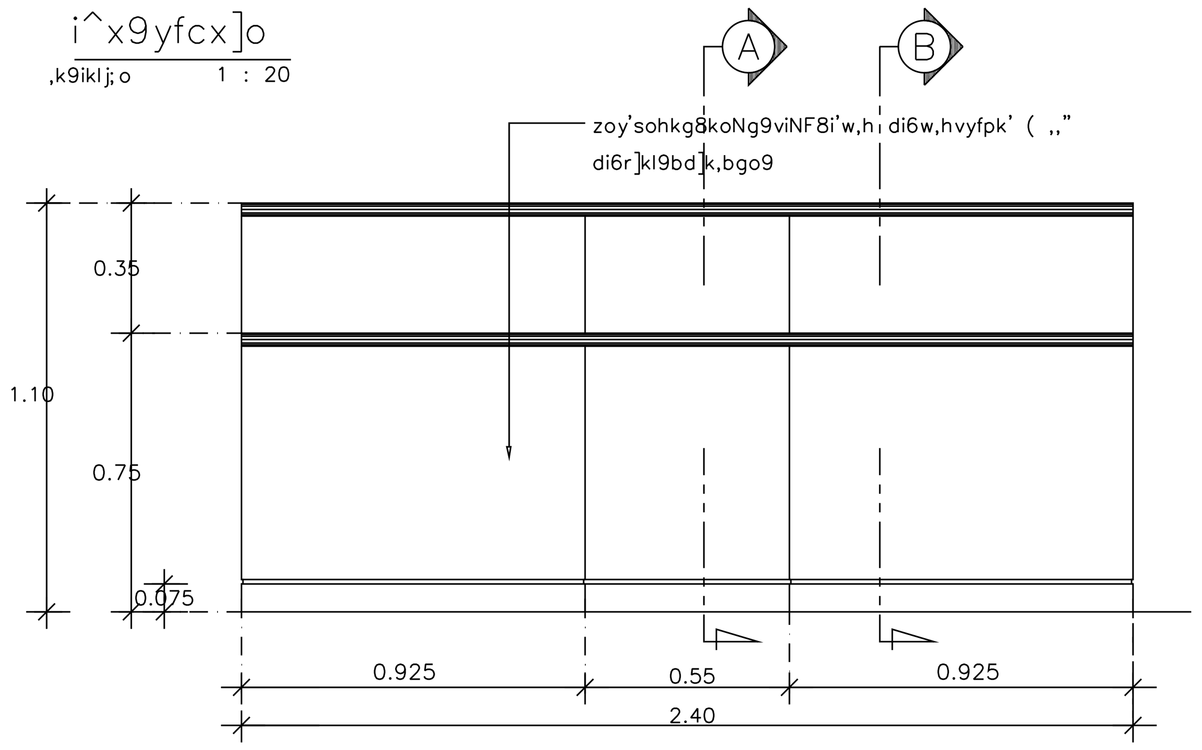

i^xfhkosohk
,k9iklj;o 1 : 20

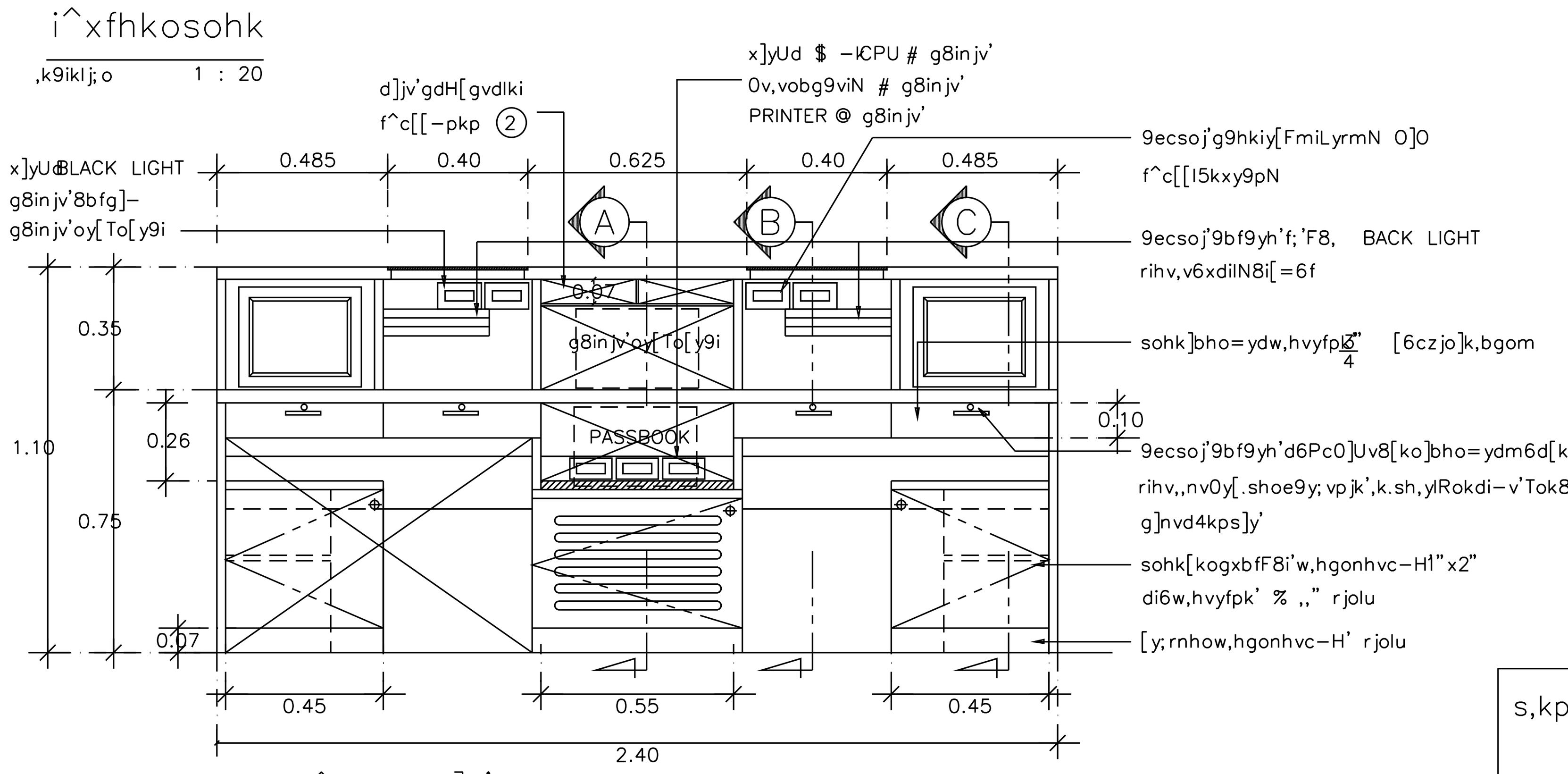

i^xfhkos]y'
,k9iklj;o 1 : 20

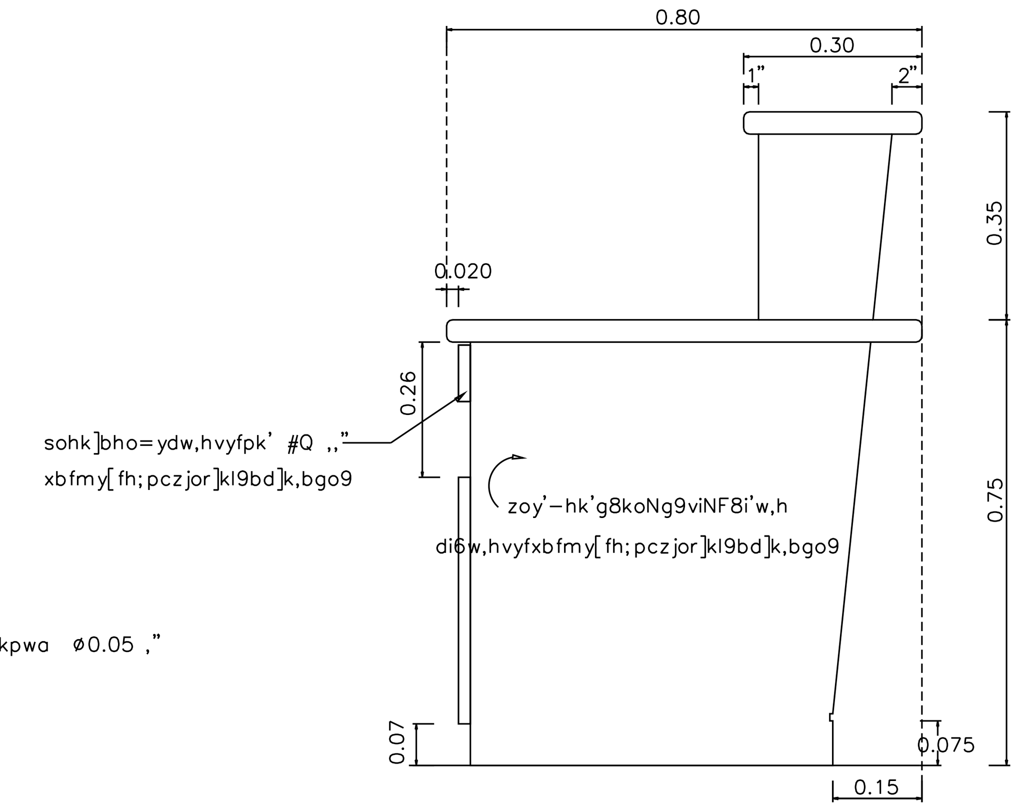

i^xfhko-hk'
,k9iklj;o 1 : 12.5

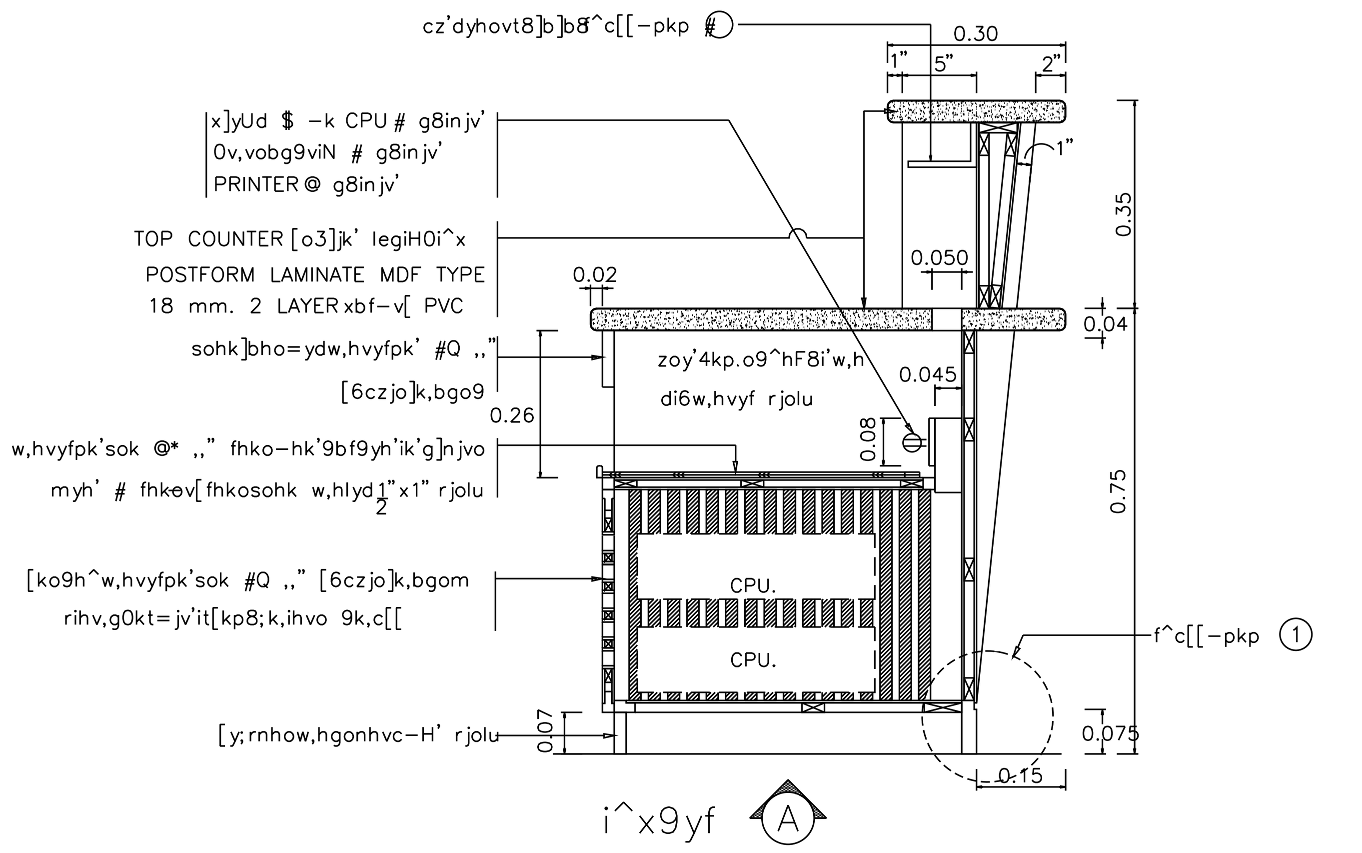

i^x9yf A
,k9iklj;o 1 : 12.5

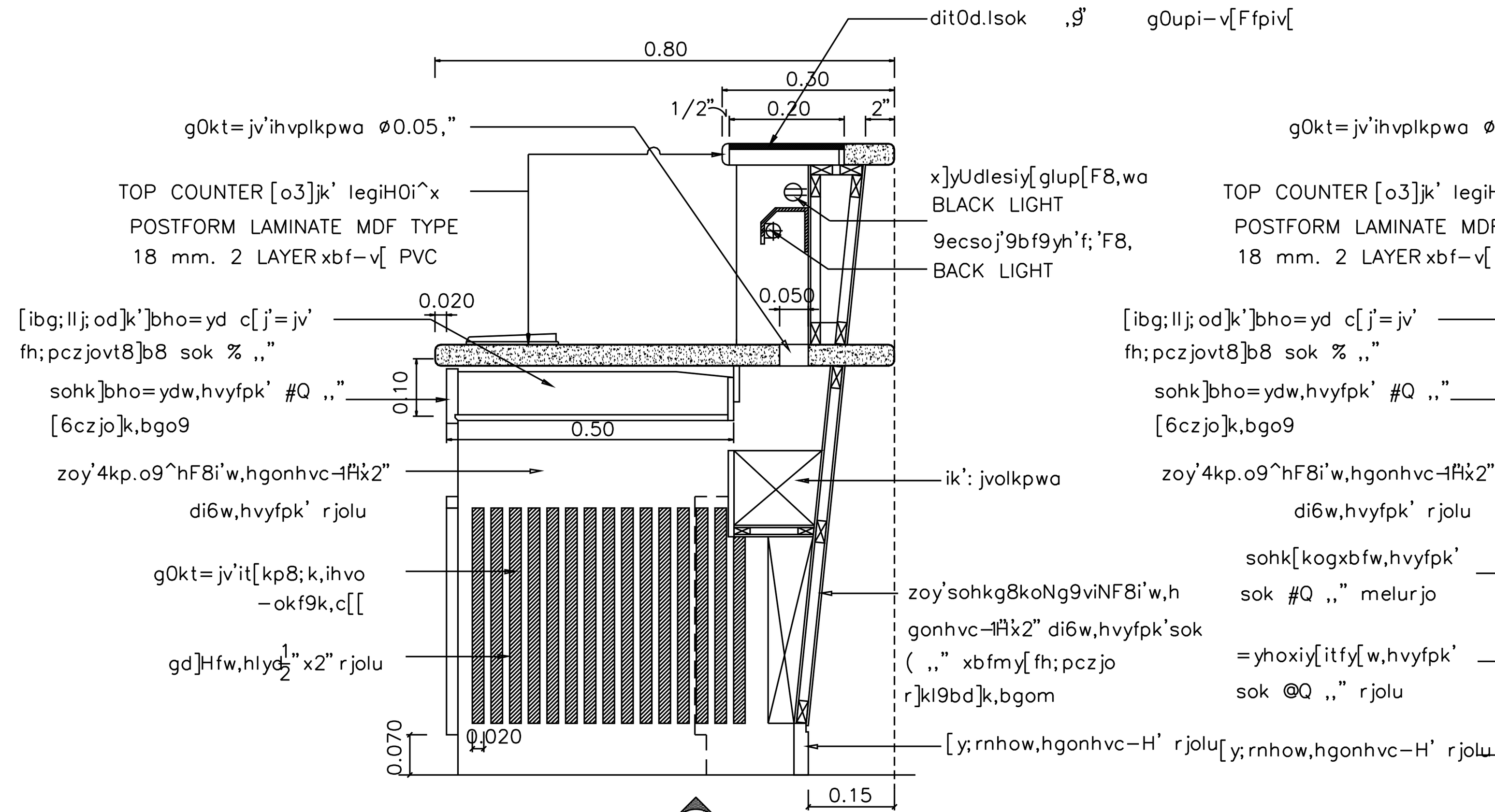

i^x9yf B
,k9iklj;o 1 : 12.5

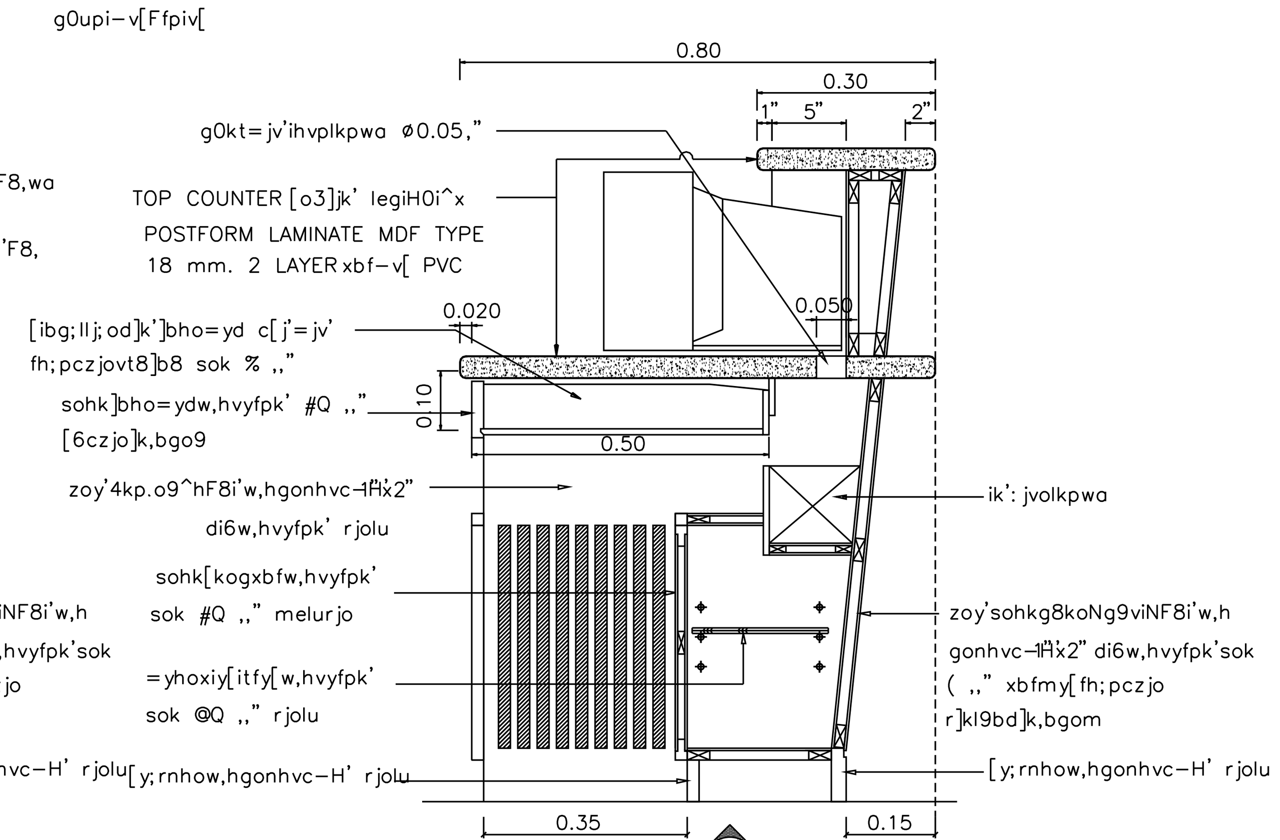

i^x9yf C
,k9iklj;o 1 : 12.5

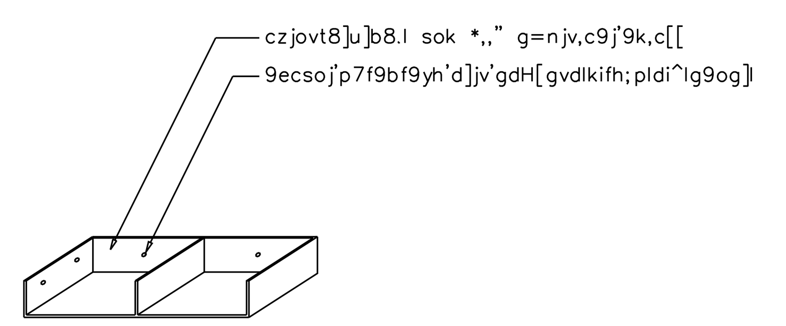

c[[-pkp #
NOT TO SCALE

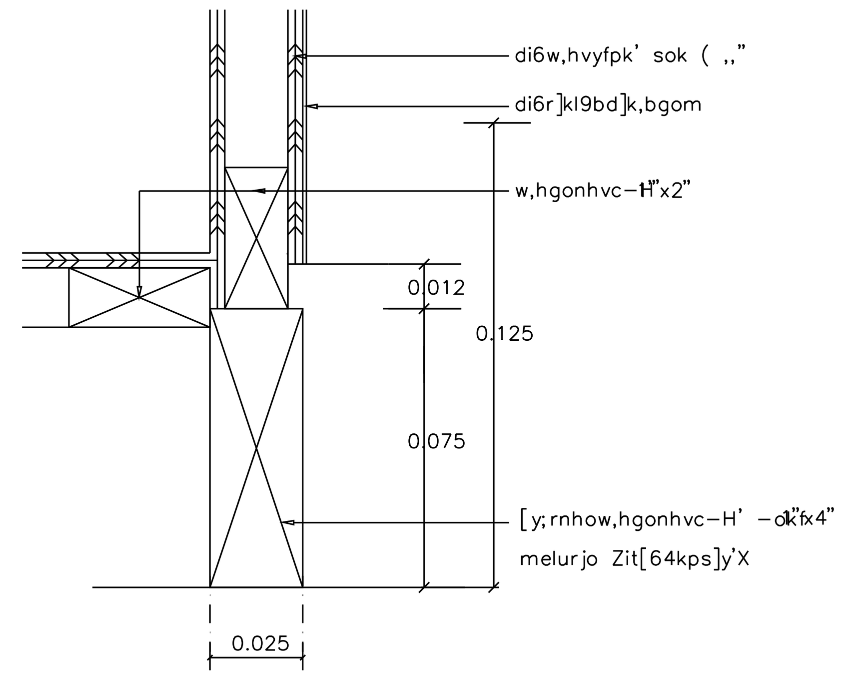

c[[-pkp @
,k9iklj;o 1 : 2

s,kpgs96

3 mk'Tok8ki0lk,ki5xiy[c9j'-okfg8koNg9viN.s,j grnjv.shlk,ki50yf v6xdilN8v,rb;g9viN-v'mk'Tok8ki0wfh

3 lurjoc]tlu-v';ylf6mju0toe,k9bf9yh' Tok8ki0lk,ki5gx]ujpocx]'wfh 9k,8;k,gs,ktl,

REVISIONS	DATE

NOTE
- ALL DIMENSIONS ARE IN METER UNLESS OTHERWISE INDICATED
- NO DIMENSION SHALL BE SCALED
- ALL DRAWINGS ARE THE PROPERTY OF THE AREA CO.,LTD. AND CAN NOT BE USED REPRODUCED OR DUPLICATED WITHOUT PERMISSION

OWNER
Tok8kigrnjvdkigdK9i
c]tlsdildkigdK9i

DESIGNER
AREA CO.,LTD.
111/1 Ladprao23 Ladyao Chatuchak Bangkok 10900
Tel. (662) 5139533-5 Fax. (662) 5139536

l5kxobd	
v]'dilN 9ik=^ l5"@Q@$l	
;yo=yp [6P;lb=pN l5"@*%)4	
okp;b[^]pN g0ibP;ik;6<b l5"@@Q#"	
okpLiu;y<oN ris,l6;iil l5"$*%$4"	
;bL;diF8i'lihk'	
okply,ryoTN -6mikoomN lp"(#)Q	
okpobookm mv',k lp"%+$$	
;bL;dil6-k4b[k]	
okplpk, 06jorb0kilN 4d")_%Q	
okpvijk,Fi0oN v699,txikdi,	
okp=bf=yp =y=;k]pNxiu=k	
;bL;diwaahk	
okp=yp;y<oN :njv9i' 4ad"*%@%	
okp;boyp mv'oriy9oN 4ad"@))#*	
;bL;dig8injv'd]	
okplpk, 06jorb0kilN 4d")_%Q	
,ylRokdi	
okplbmTb=yp v6optryoTN l5"["Z4kp.oX	
ok'vkiu;y]pN d6ptTiri9 LK"["	
okpvbllit =^;'KN LK"["	
DRAWN	DATE
CHECKED	
APPROVED	

F8i'dki
xiy[xi6'vk8kileoyd'kolk-k
Zleoyd'ko # =yhoX

muj9&'

c[[clf'
c[[-pkpg8koNg9viNl^' F4

FILE NO 0203	DRAWING NO
DATE 10 / 02 / 2003	A - 42
SUB TOTAL 46	GRAND TOTAL